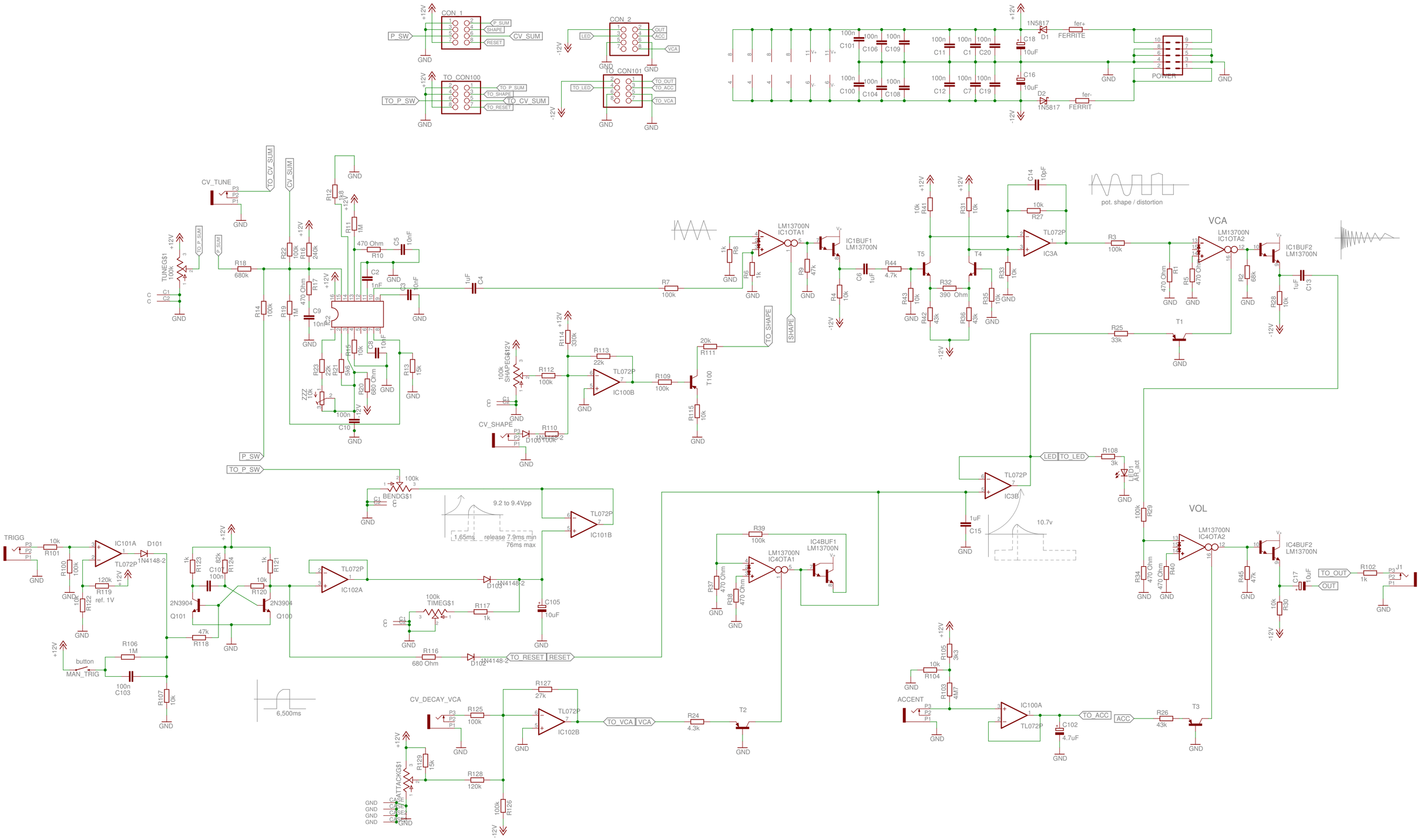

CON_1
CON_2
TO_CON100
TO_CON101
P_SW
CV_SUM
TO_P_SW
TO_CV_SUM
LED
VCA
TO_LED
TO_OUT
TO_ACC
TO_VCA
POWER
FERRITE
FERRIT
1N5817
D1
D2
CV_TUNE
TUNEG$1
TO_CV_SUM
CV_SUM
P_SW
TO_P_SW
LM13700N
IC1OTA1
IC1BUF1
LM13700N
TL072P
IC3A
IC1OTA2
IC1BUF2
pot. shape / distortion
VCA
SHAPE
TO_SHAPE
SHAPEG$12V
CV_SHAPE
IC100B
T100
BENDG$1
9.2 to 9.4Vpp
1,65ms
release 7.9ms min
76ms max
IC101B
TRIGG
IC101A
IC102A
2N3904
Q101
Q100
TIMEG$1
IC4OTA1
IC4BUF1
IC3B
10.7v
VOL
IC4OTA2
IC4BUF2
TO_OUT
OUT
button
MAN_TRIG
6,500ms
CV_DECAY_VCA
IC102B
TO_VCA
VCA
ATTACKG$1
ACCENT
IC100A
TO_ACC
ACC